DWG.NO.

MARK	DATE	REVISION	REASON	SIGNATURE

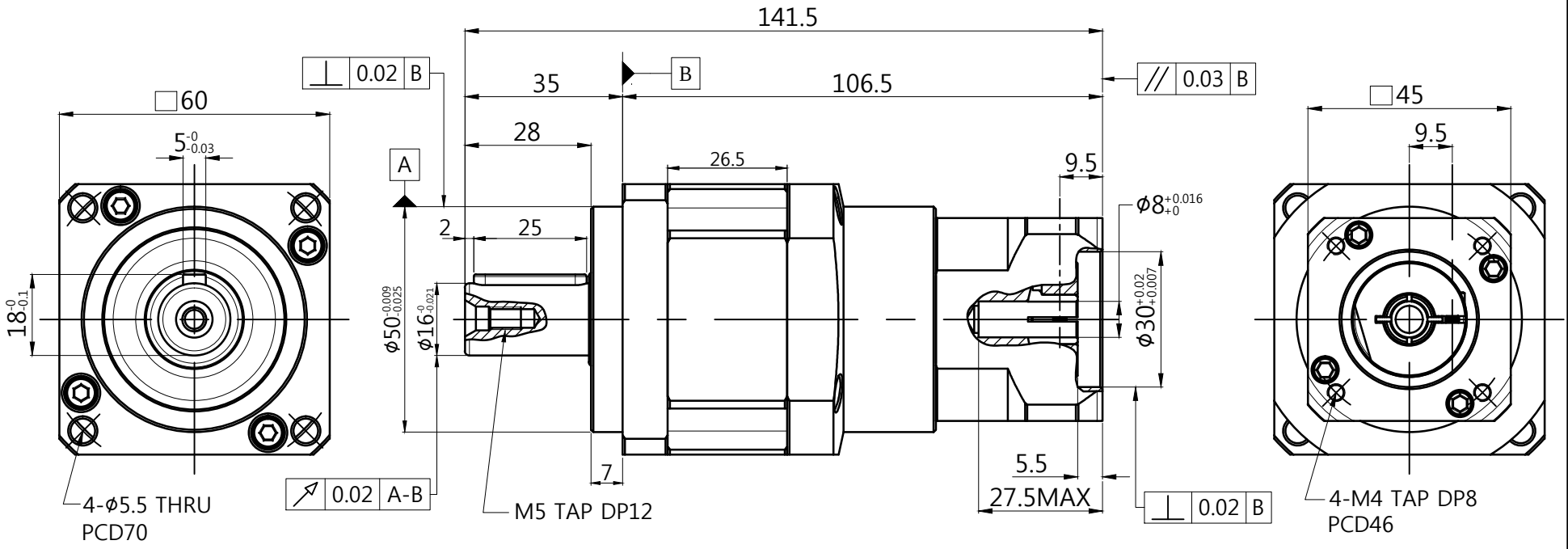

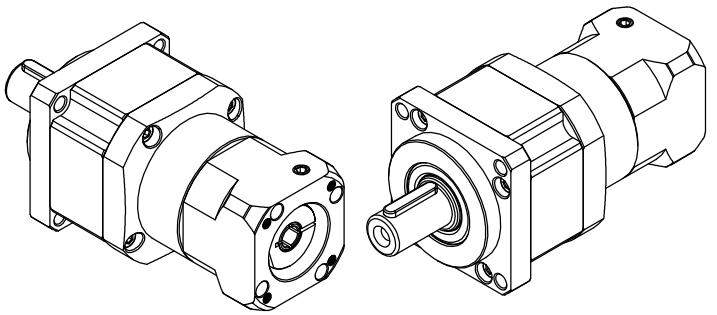

1. MODEL : BP 060-2단
2. Reducer specification

Ratio	Backlash Max (arc-min)	Out Torque(N.m)		Rate input speed Max. (r.p.m)	Peak input speed Max. (r.p.m)	Force (N)		Weight (kg)
		Rate	Peak			Radial	Thrust	
15~100	L≤8, S≤15			3,000	5,000	1,510	765	

3. Application of Motor

Output Capacity(W)	Maker	Model	Rate torque (N.m)	Peak torque (N.m)

	ASS'Y			1		
NO.	DESCRIPTIONS	SIZE	MAT'L	Q'TY	WEIGHT (kgf)	REMARKS

CUSTOMER	STANDARD	SCALE	N/S	PROJECTION	
TITLE	BP 060-2단	DWG.NO.			REV. NO. 0
		REF.NO.			
DRAWN	CHECKED	APPROVED	Brato 브라토(주) BRATO DRIVES		
S.K Chung					